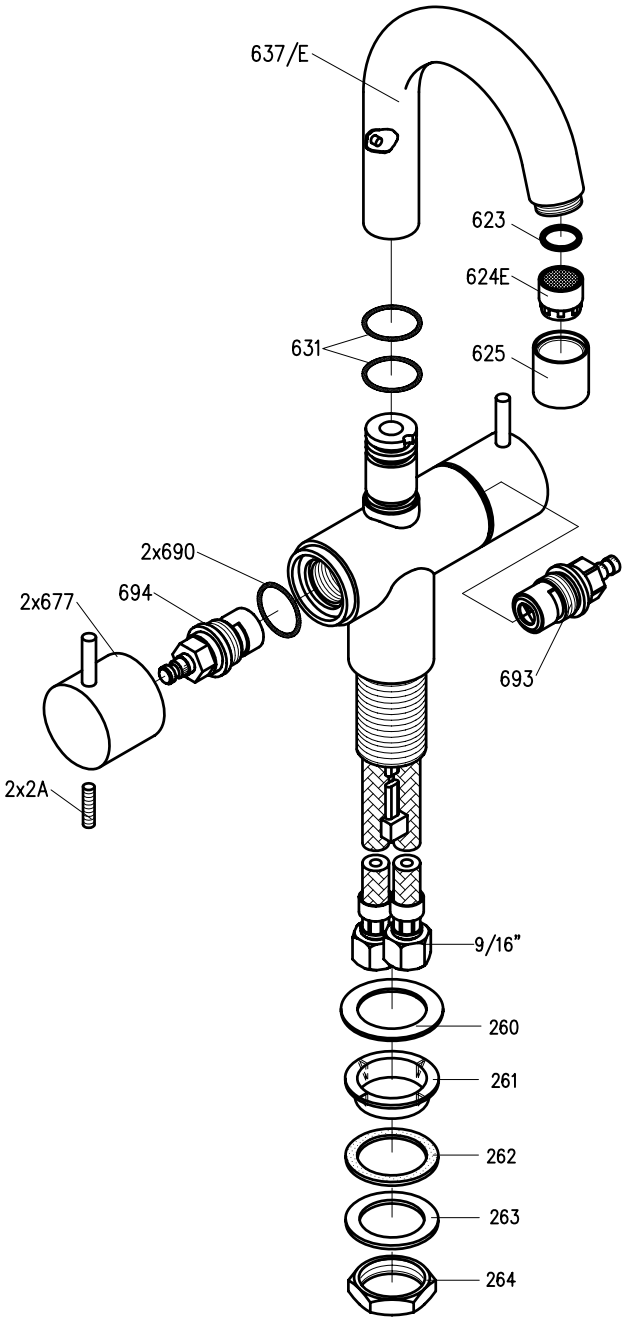

VR010E: VR623, VR624E
VR693K: VR23, VR693
VR694K: VR23, VR694

Vola A/S
Lunavej 2
DK-8700 Horsens
Tlf : +45 70235500
Fax: +45 70235511
sales@vola.dk
www.vola.com

Vola FHV6$

Dato: Apr.08

Rev: 2

Blad: SB45.C

DXOMAL-FHV6$-SB45.C_R2