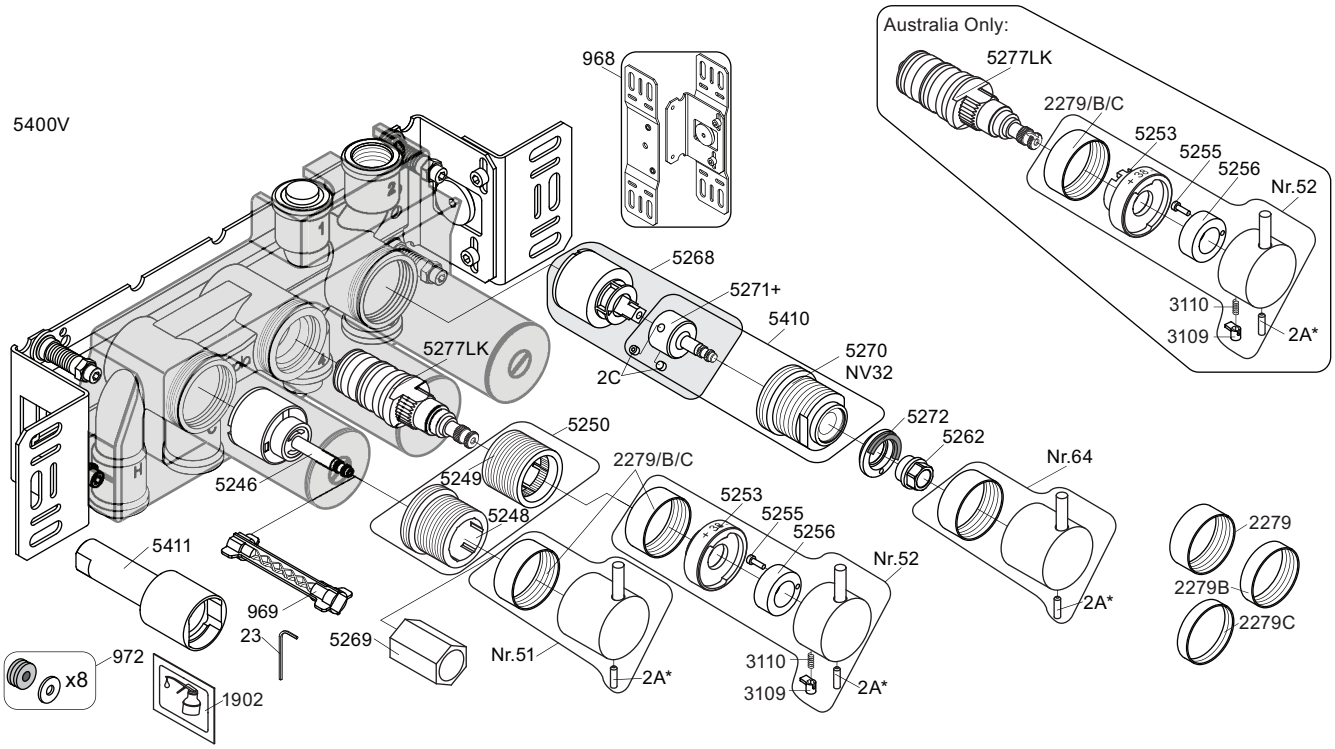

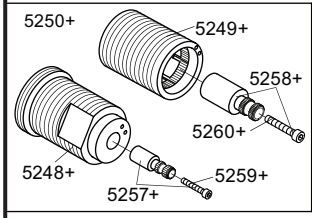

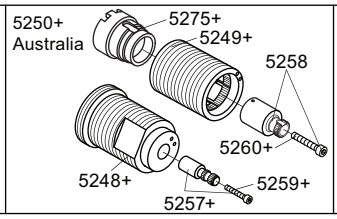

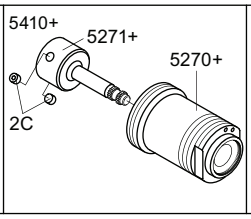

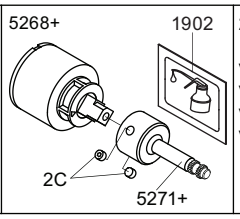

2A* Color

VR2A-Steel: Standard
VR2A-F60: F17-F27-F60
VR2A-F63: F63-F64
VR2A-F65: F19-F65-F70

NR51:	VR5251, VR2279+B+C, VR2A
NR52:	VR2A, VR5252, VR5253, VR5255, VR5256, VR2279+B+C, VR3113
NR64:	VR5251, VR2279+B+C, VR2A
VR3113:	VR3109, VR3110, VR5255
VR5250+:	VR5248+, VR5249+, VR5257, VR5258, VR5259, VR5260
VR5250AUS+:	VR5248+, VR5249+, VR5257, VR5258, VR5259, VR5260, VR5275
VR5257+:	VR5257+, VR5259+
VR5258+:	VR5258+, VR5260+
VR5268+:	2xVR2C, VR1902, VR5268, VR5271+
VR5410+:	2xVR2C, VR5270+, VR5271+

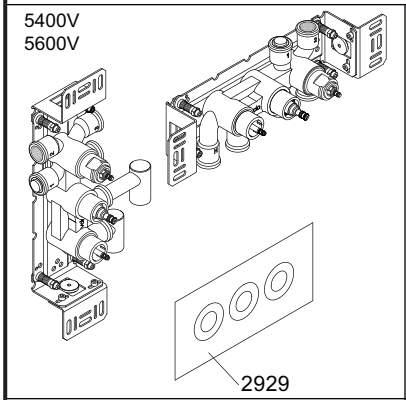

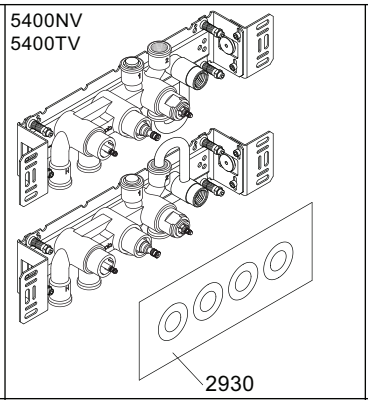

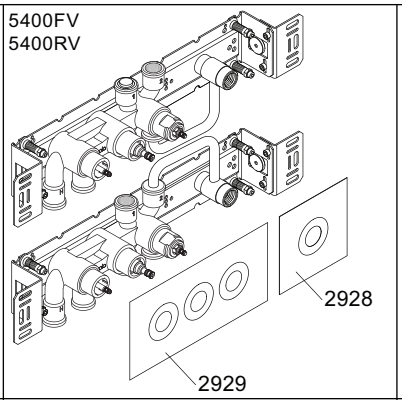

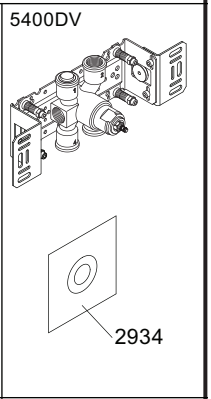

5003B	5004B	5004L	
3x2001	3x2001, 001	3x2001, 001	2001

vola
Lunavej 2
DK-8700 Horsens
Tlf : + 45 7023 5500
sales@vola.com
www.vola.com

VOLA 5400V

5400FV, 5400NV
5400RV, 5400TV
5600V

Date
May 22

Rev.
6

Sheet
SB 10.54