**VOLA 500, 590, 500T1**
**VOLA 2500**
**VOLA SC1, SC3, SC5, SC7, SC9, SC10, SC12**

Fitting instruction
Montageanleitung
Monteringsvejledning
Monteringsvägledning
Montage hanleiding
Manuel de montage

GODKENDT
TIL DRIKKEVAND

04/00027
04/00038

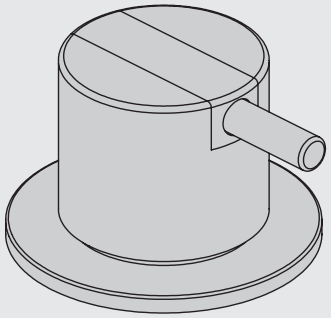

www.vola.com

vola

500 - 2500_V0_40998137
02-10-2023

5 705230 492964

**Data, 3 Bar /43.5 Psi:**

| | l/min. | Gal/min. |
|---|---|---|
| 500: | 14,5 | 3.8 |
| 590: | 9,0 | 2.4 |
| 500-T1: | 11,0 | 2.9 |
| 2500: | 18,7 | 4.9 |
| SC1: | 18,7 | 4.9 |
| SC5, 7: | 18,0 | 4.8 |
| SC9: | 11,0 | 2.9 |

Max. 65°C, 150°F

**500/2500:**

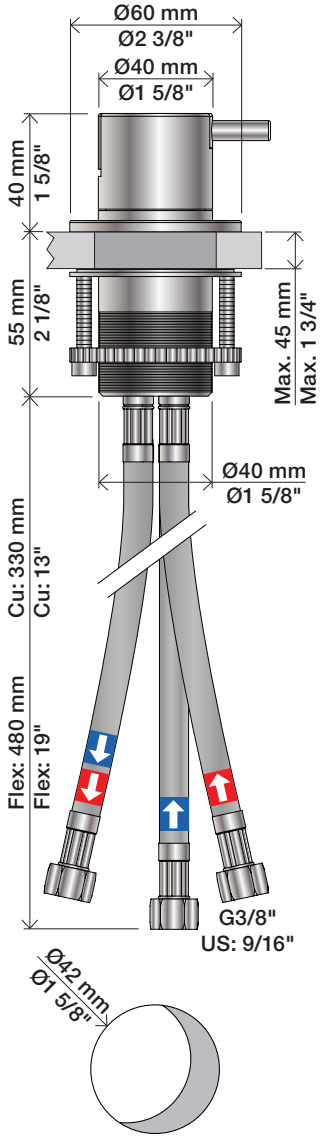


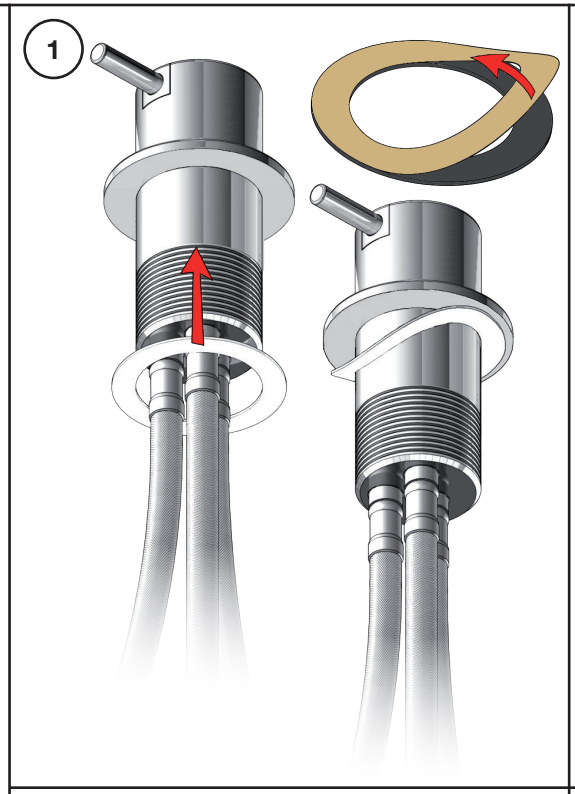


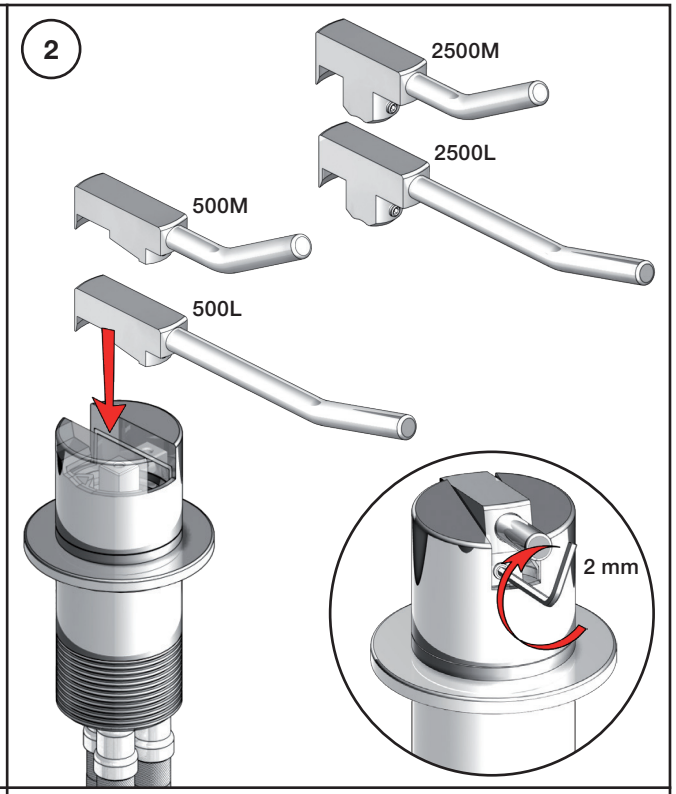


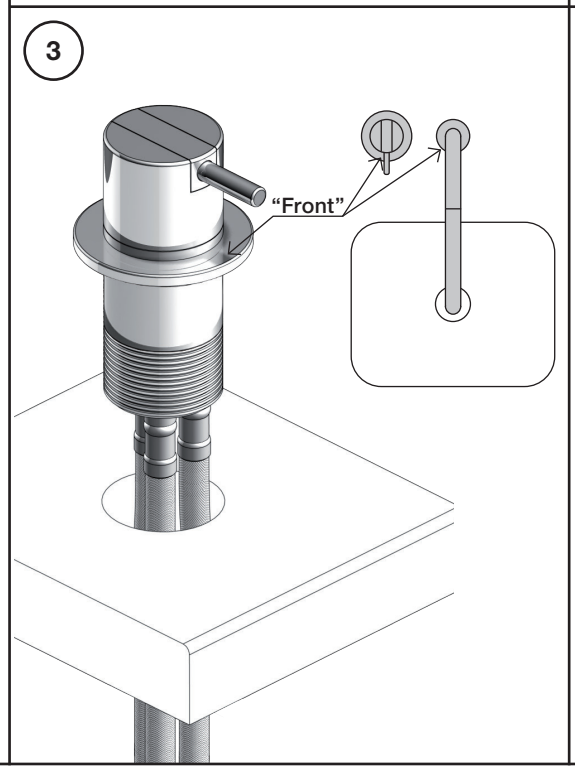


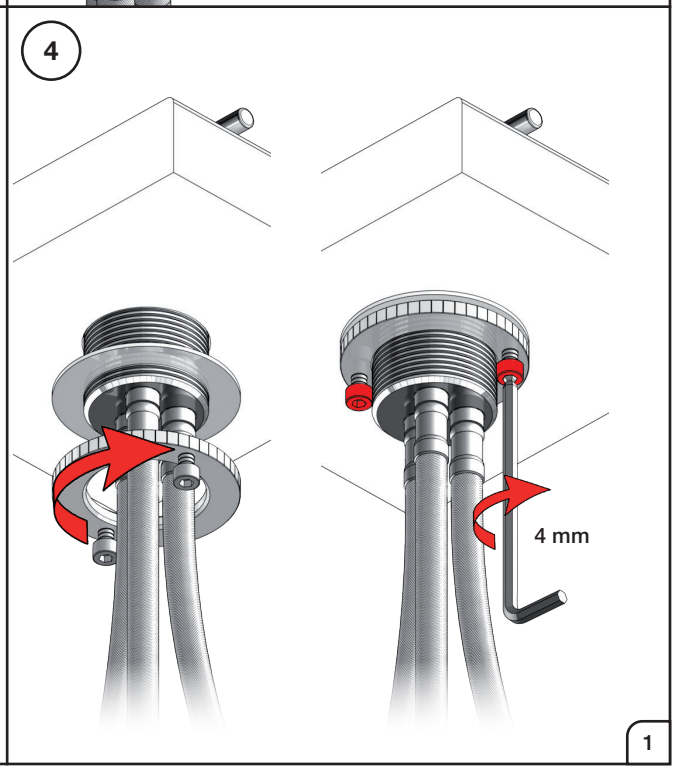

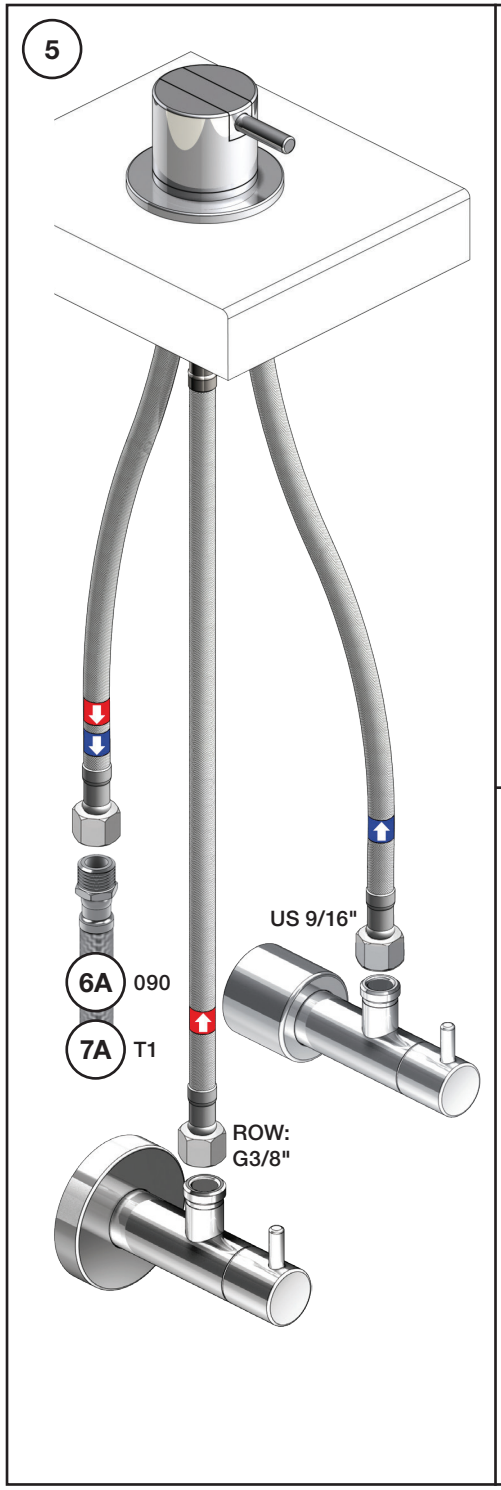


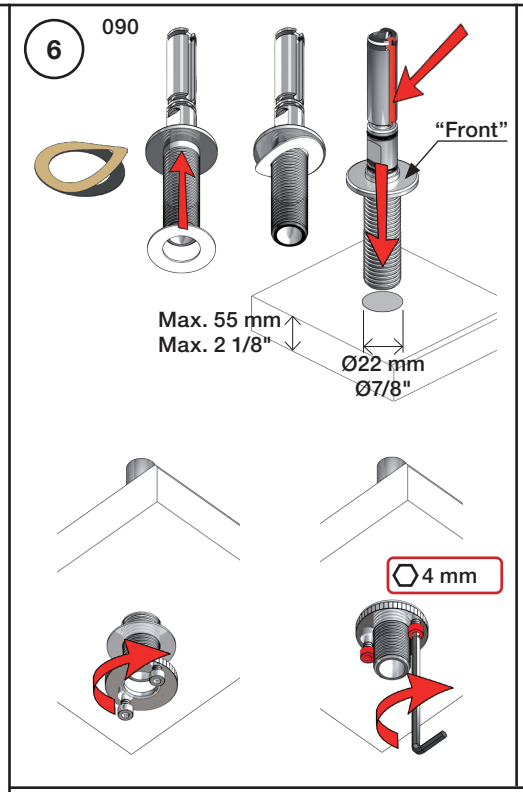


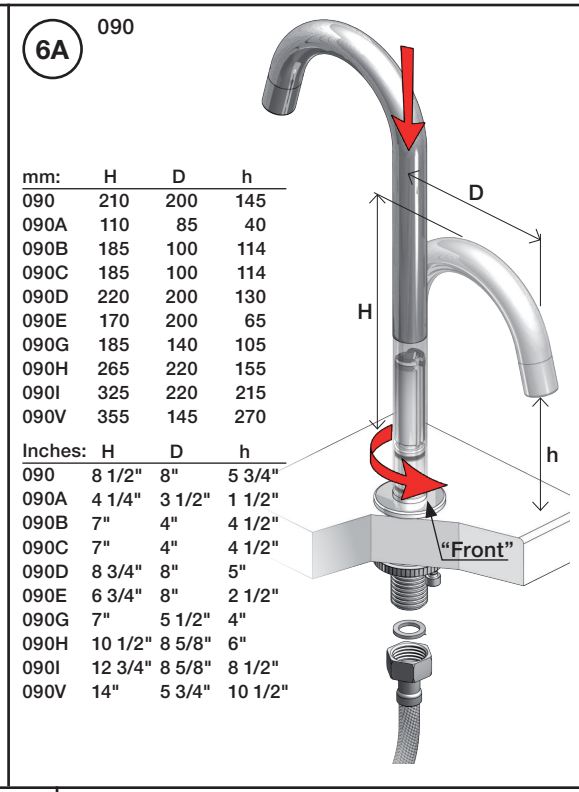


| mm: | H | D | h |
|---|---|---|---|
| 090 | 210 | 200 | 145 |
| 090A | 110 | 85 | 40 |
| 090B | 185 | 100 | 114 |
| 090C | 185 | 100 | 114 |
| 090D | 220 | 200 | 130 |
| 090E | 170 | 200 | 65 |
| 090G | 185 | 140 | 105 |
| 090H | 265 | 220 | 155 |
| 090I | 325 | 220 | 215 |
| 090V | 355 | 145 | 270 |

| Inches: | H | D | h |
|---|---|---|---|
| 090 | 8 1/2" | 8" | 5 3/4" |
| 090A | 4 1/4" | 3 1/2" | 1 1/2" |
| 090B | 7" | 4" | 4 1/2" |
| 090C | 7" | 4" | 4 1/2" |
| 090D | 8 3/4" | 8" | 5" |
| 090E | 6 3/4" | 8" | 2 1/2" |
| 090G | 7" | 5 1/2" | 4" |
| 090H | 10 1/2" | 8 5/8" | 6" |
| 090I | 12 3/4" | 8 5/8" | 8 1/2" |
| 090V | 14" | 5 3/4" | 10 1/2" |

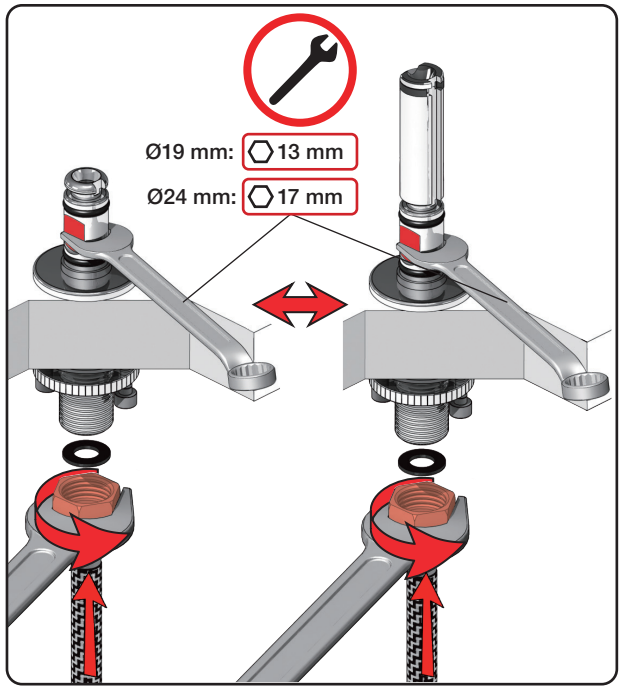


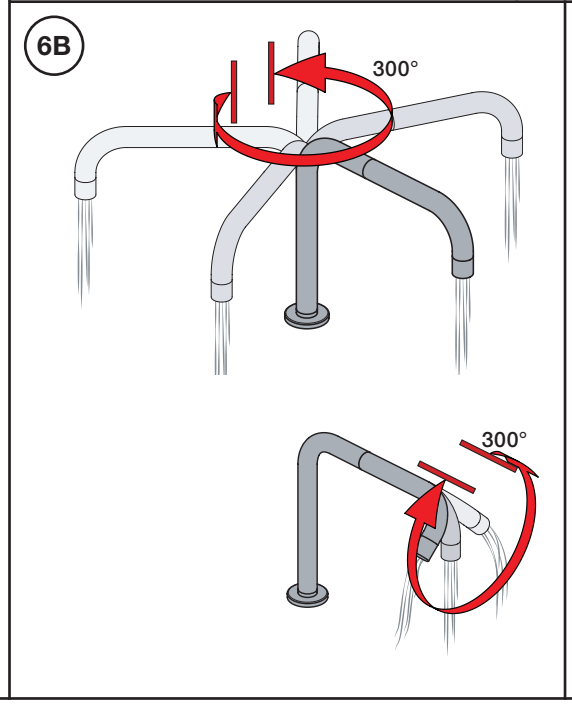


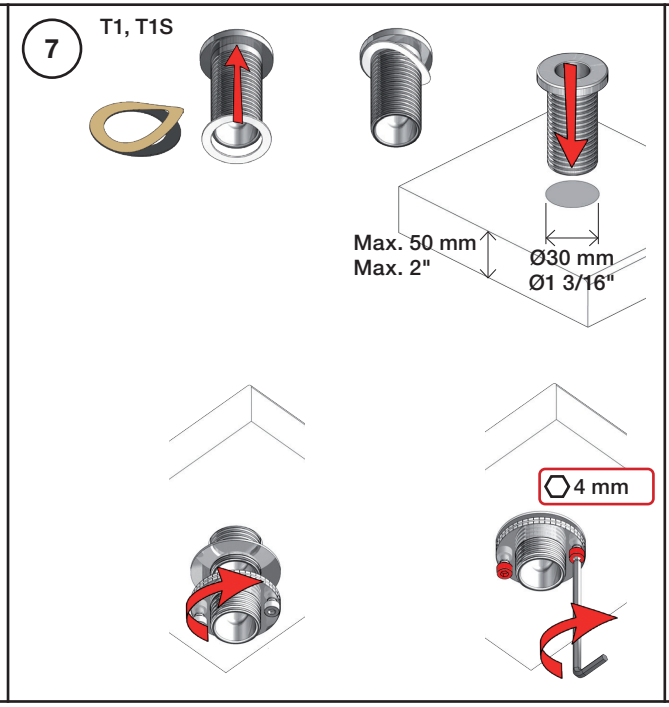


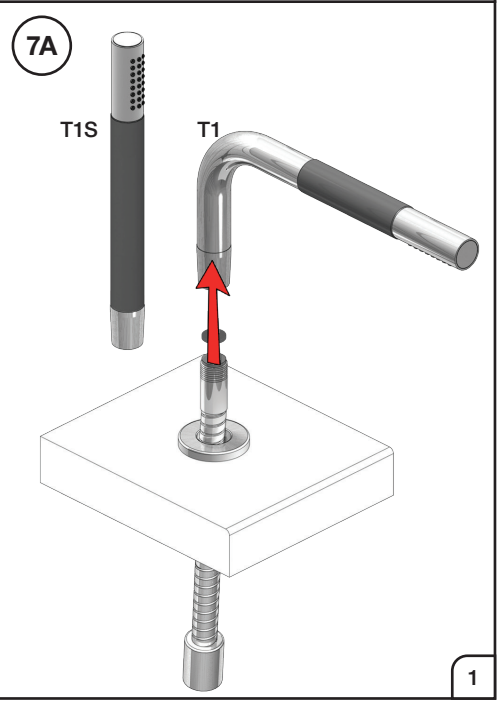




VOLA A/S • Lunavej 2 • DK-8700 Horsens • Tel. +45 7023 5500 • Fax +45 7023 5511 • sales@vola.dk • www.vola.com

VOLA 090, 090A, 090B:
VOLA 090C, 090D, 090E:
VOLA 090G, 090H, 090I, 090V:

1 - 4

VOLA 090FM:

5

Fitting instruction
Montageanleitung
Monteringsvejledning

Monteringsvägledning
Montage hanleiding
Manuel de montage

GODKENDT
TIL DRIKKEVAND

04/00045
04/00109

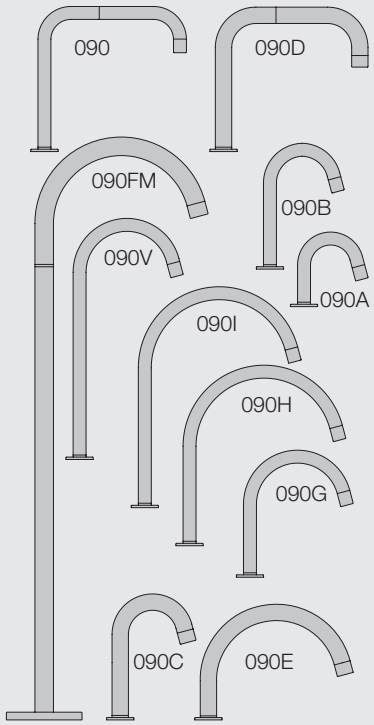


www.vola.com

vola

mnt_090_V4_40999824
21-11-2023

5 703182 372365

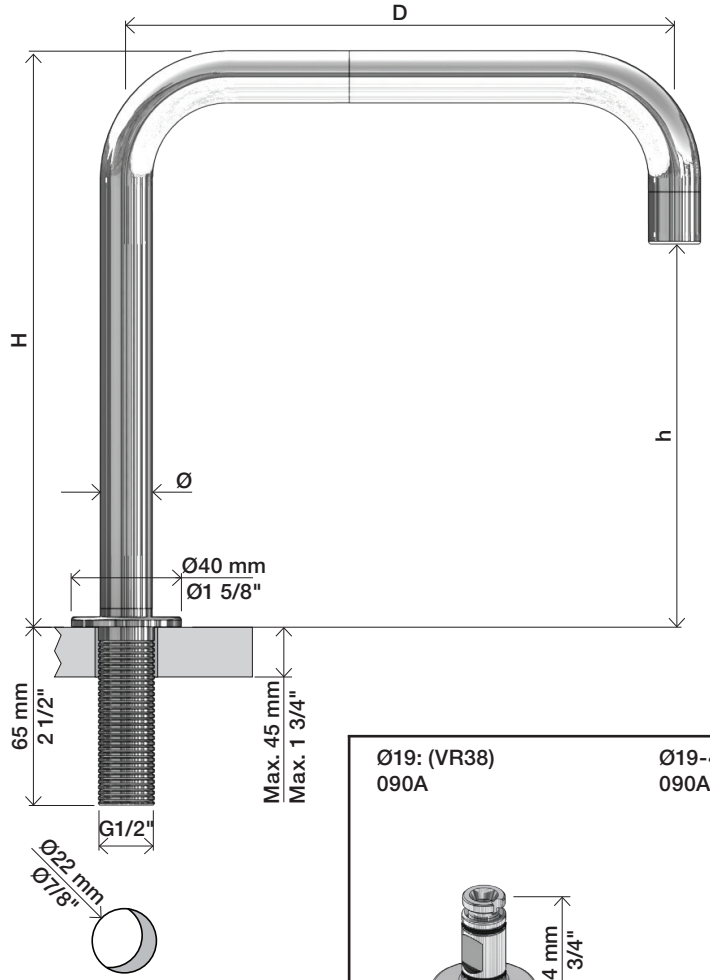


| mm: | Ø | H | D | h |
|---|---|---|---|---|
| 090 | 19 | 210 | 200 | 145 |
| 090A | 19 | 110 | 85 | 40 |
| 090B | 19 | 185 | 100 | 114 |
| 090C | 24 | 185 | 100 | 114 |
| 090D | 24 | 220 | 200 | 130 |
| 090E | 24 | 170 | 200 | 65 |
| 090G | 19 | 185 | 140 | 105 |
| 090H | 19 | 265 | 220 | 155 |
| 090I | 19 | 325 | 220 | 215 |
| 090V | 19 | 355 | 145 | 270 |

| Inches: | Ø | H | D | h |
|---|---|---|---|---|
| 090 | 3/4" | 8 1/4" | 8" | 5 3/4" |
| 090A | 3/4" | 4 1/4" | 3 1/2" | 1 1/2" |
| 090B | 3/4" | 7" | 4" | 4 1/2" |
| 090C | 1" | 7" | 4" | 4 1/2" |
| 090D | 1" | 8 3/4" | 8" | 5" |
| 090E | 1" | 6 3/4" | 8" | 2 1/2" |
| 090G | 3/4" | 7" | 5 1/2" | 4" |
| 090H | 3/4" | 10 1/2" | 8 5/8" | 6" |
| 090I | 3/4" | 12 3/4" | 8 5/8" | 8 1/2" |
| 090V | 3/4" | 14" | 5 3/4" | 10 1/2" |

Ø19: (VR38)
090A

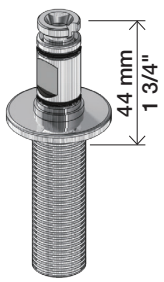


Ø19-40: (VR38A)
090A

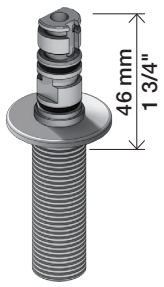


Ø19: (VR38L)
090
090B
090G
090H
090I
090V

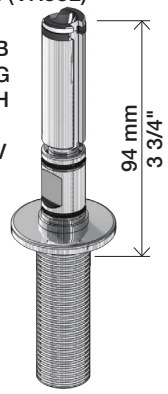


Ø19-40: (VR38)
090
090B
090G
090H
090I
090V

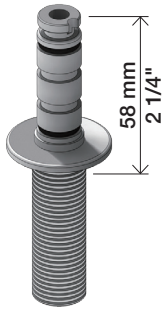


Ø24: (VR638)
090C
090D
090E

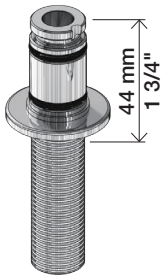


Ø24-40: (VR633)
090C
090D
090E

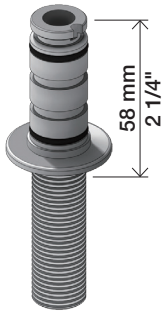


1

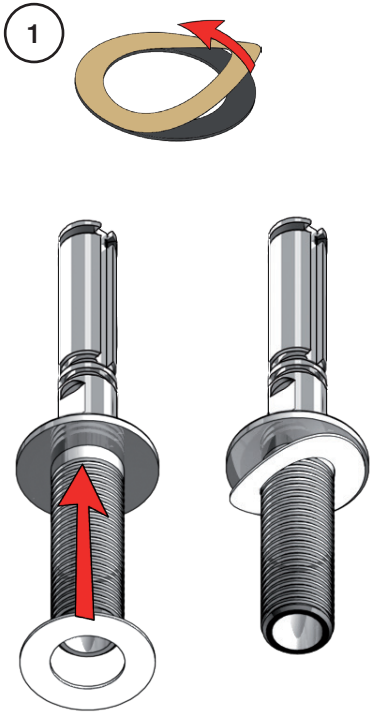

2

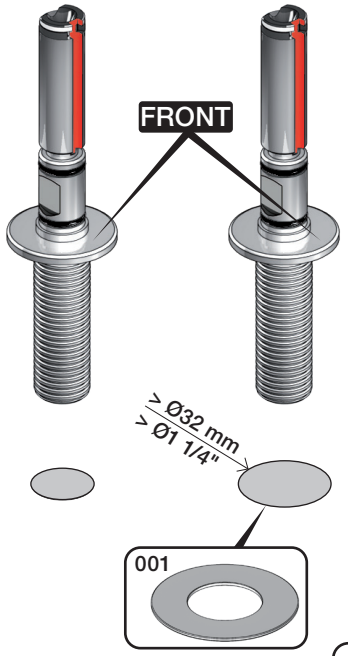

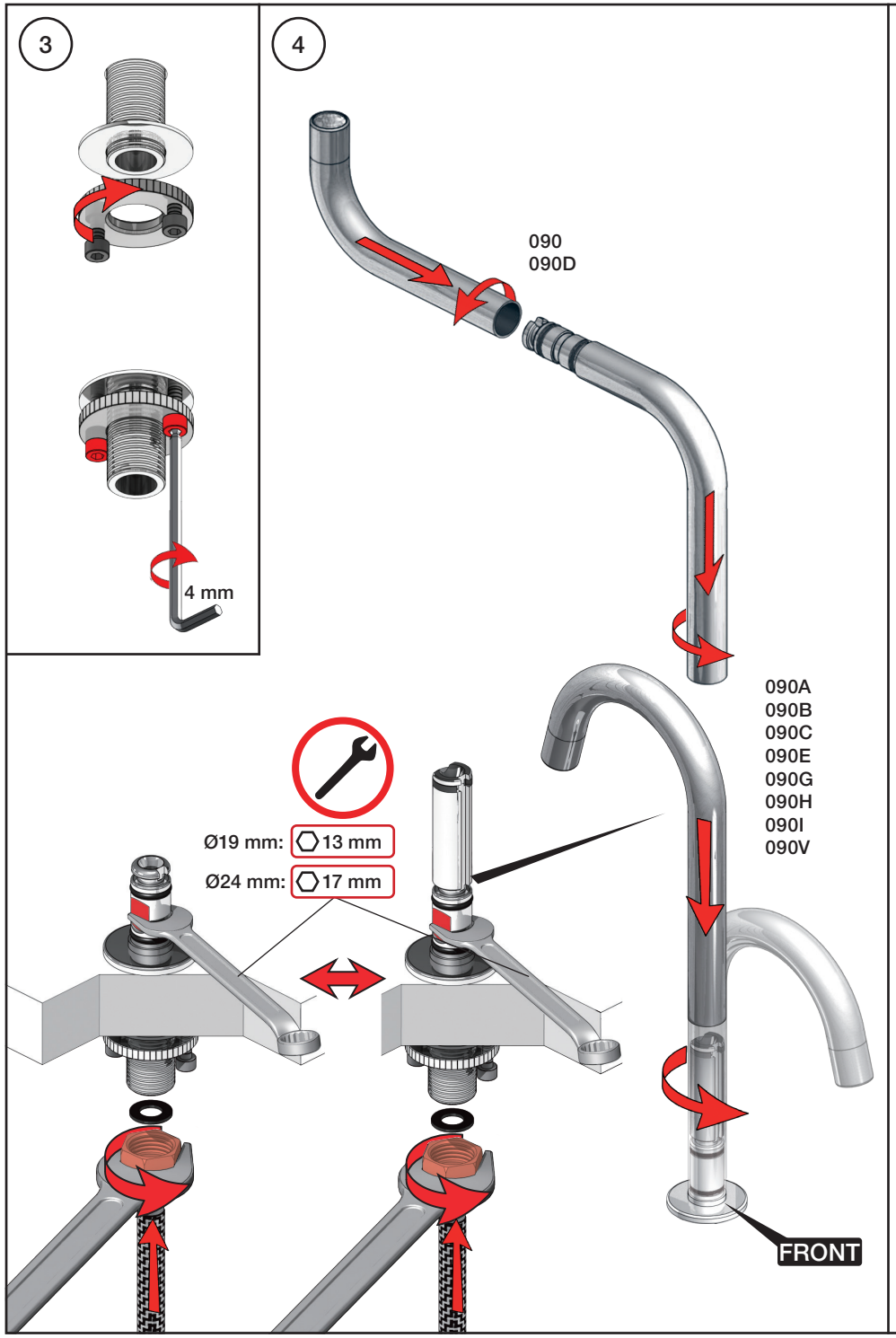


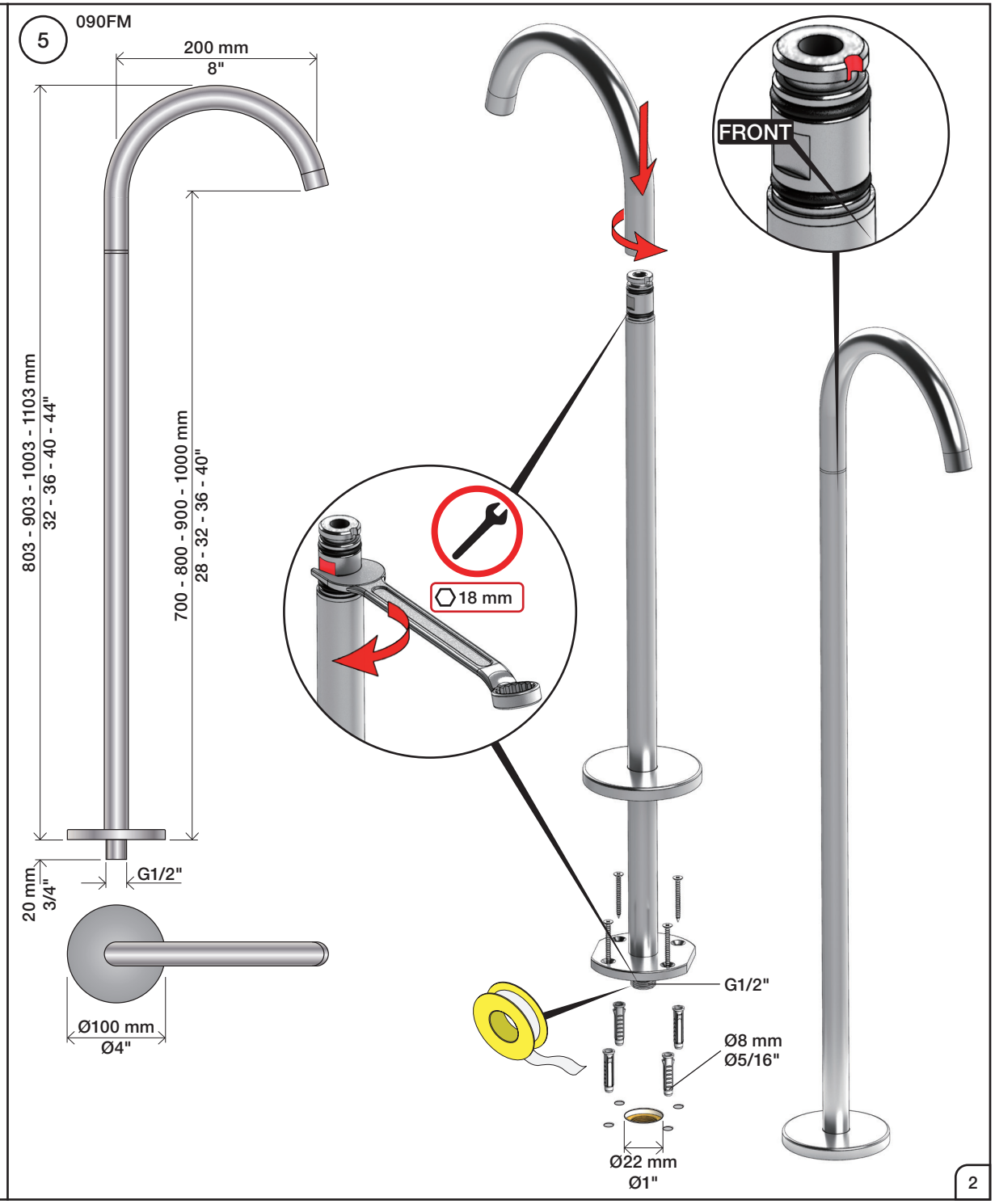




VOLA A/S • Lunavej 2 • DK-8700 Horsens • Tel. +45 7023 5500 • sales@vola.dk • www.vola.com

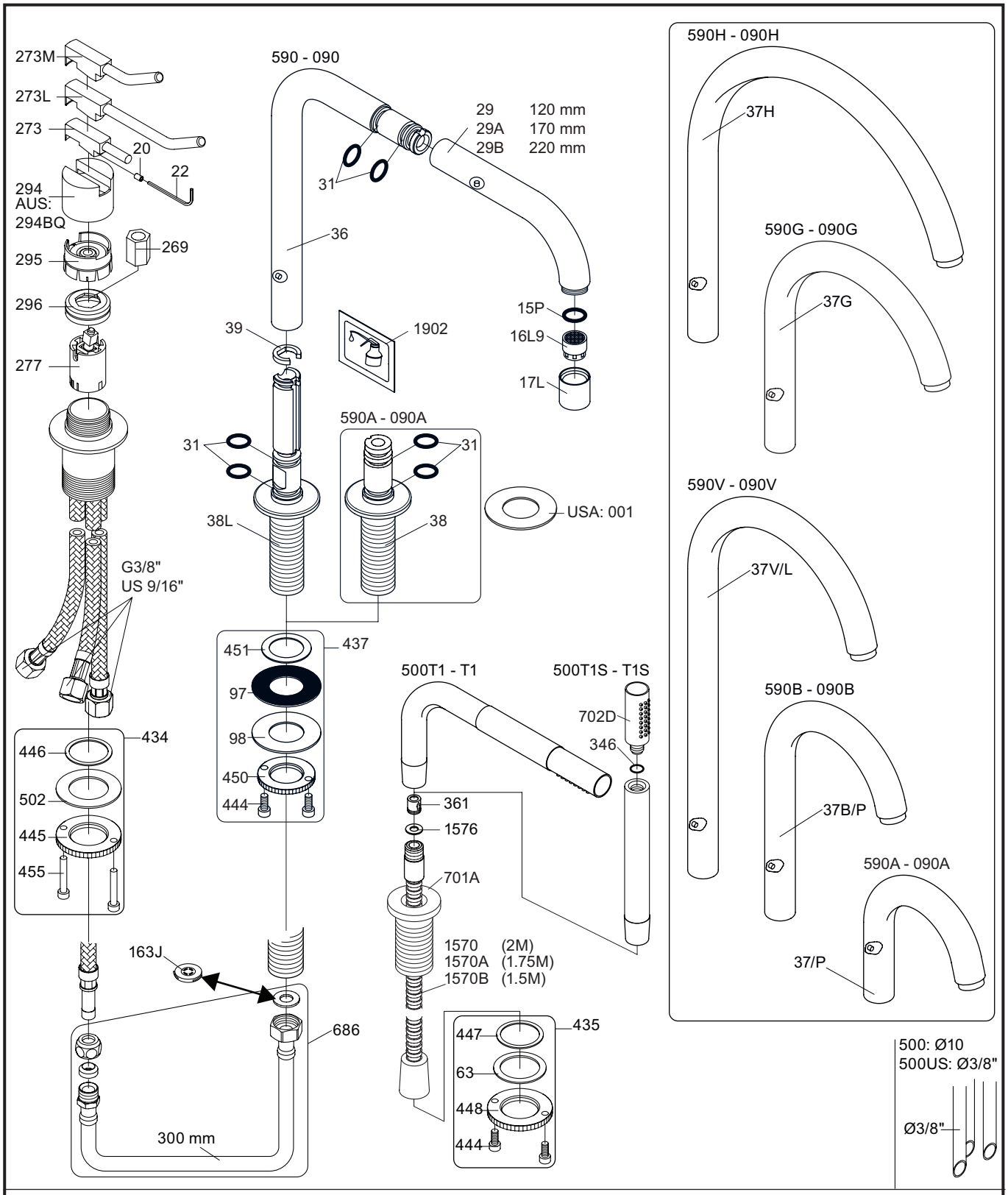


VR277K: VR22, VR269, VR277
VR297: VR20, VR22, VR269, VR273, VR277, VR294, VR295, VR296
VR434: VR261, VR263, VR440, VR442, 2xVR455
VR437: VR97, VR98, 2xVR444, VR450, VR451
NR.10: VR20, VR22, VR273, VR294, VR295
VR090: VR15P, VR16L9

vola
Lunavej 2
DK-8700 Horsens
Tlf : + 45 7023 5500
sales@vola.com
www.vola.com

# VOLA 590 All
# VOLA 500T1/SC9
# VOLA 500T1S

Date
Jan. 23

Rev.
5

Sheet
SB 27.72

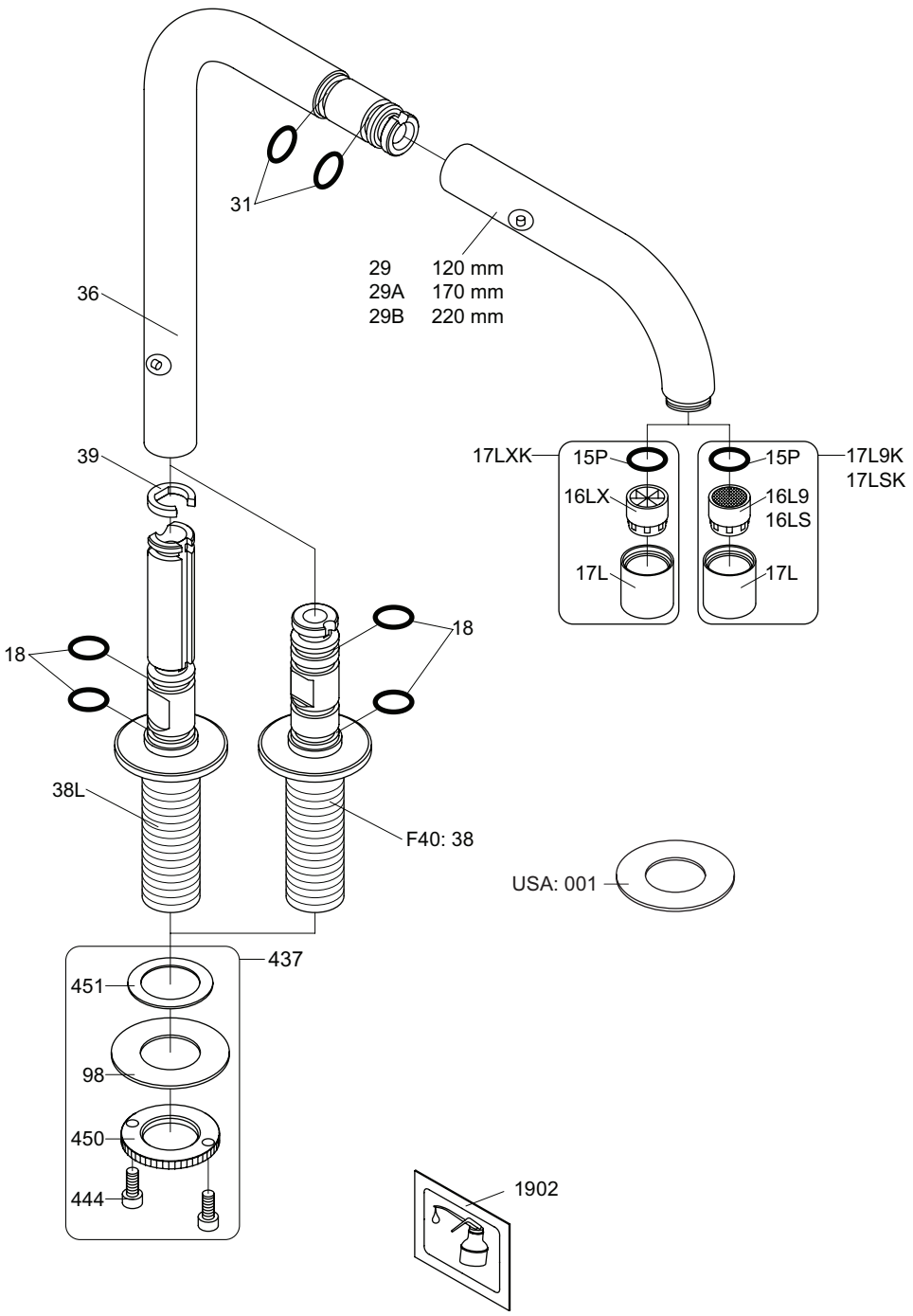


VR17L9K: VR15P, VR16L9, VR17L
VR17LSK: VR15P, VR16LS, VR17L
VR17LXK: VR15P, VR16LX, VR17L
VR090L9: VR15P, VR16L9, VR17L, 2xVR18, 2xVR31, VR1902
VR437: VR98, 2xVR444, VR450, VR451

vola
Lunavej 2
DK-8700 Horsens
Tlf : + 45 7023 5500
sales@vola.com
www.vola.com

# VOLA 090

Date
Okt. 16

Rev.
3

Sheet
SB 18

500:

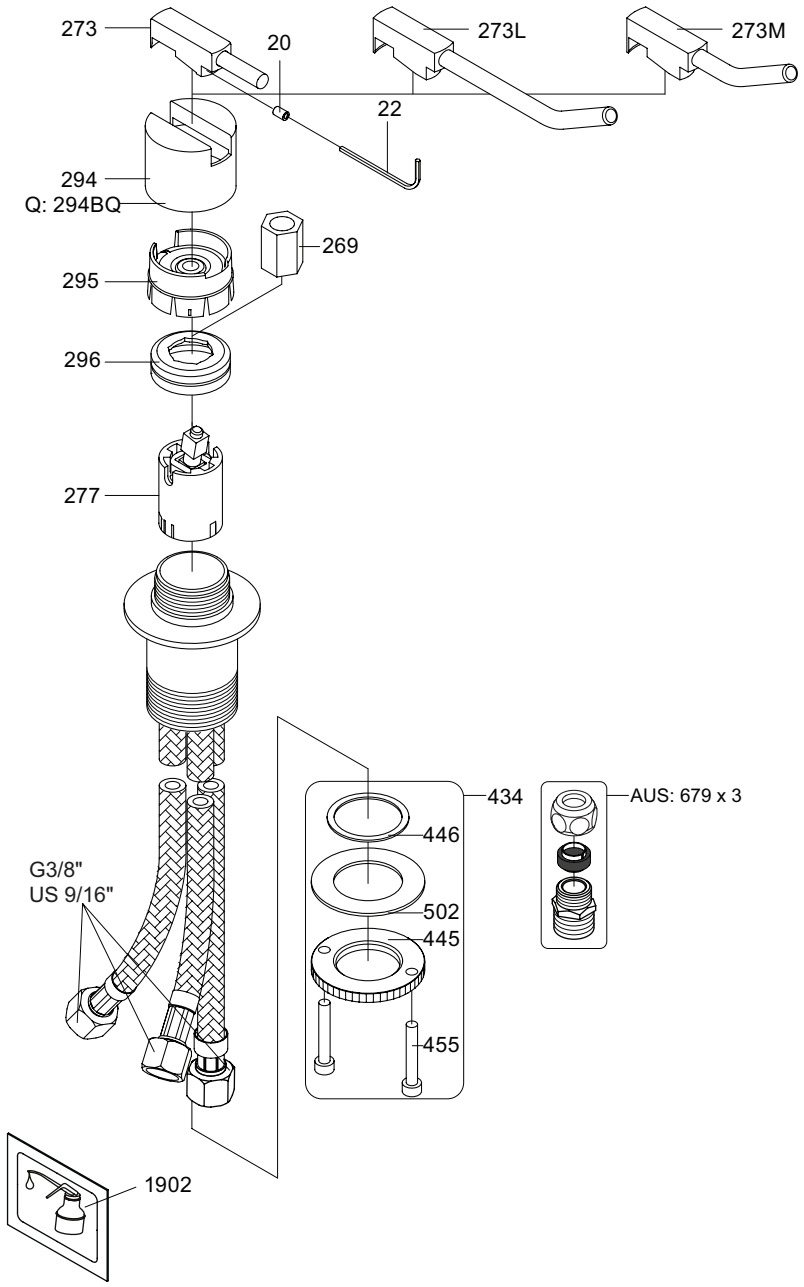


500: Ø10
500US: Ø3/8"

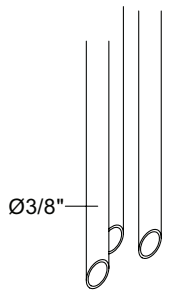


| | |
|---|---|
| VR277K: | VR22, VR269, VR277 |
| VR297: | VR20, VR22, VR269, VR273, VR277, VR294, VR295, VR296 |
| VR434: | 2xVR444, VR445, 2xVR455, VR502 |
| NR.10: | VR20, VR22, VR273, VR294, VR295 |

vola
Lunavej 2
DK-8700 Horsens
Tlf : + 45 7023 5500
sales@vola.com
www.vola.com

# VOLA 500/M/L

Date
Jan. 23

Rev.
4

Sheet
SB 4.1