VOLA KV1

Fitting instruction
Montageanleitung
Monteringsvejledning
Monteringsvägledning
Montage hanleiding
Manuel de montage

GODKENDT TIL DRIKKEVAND

04/00203
04/00206

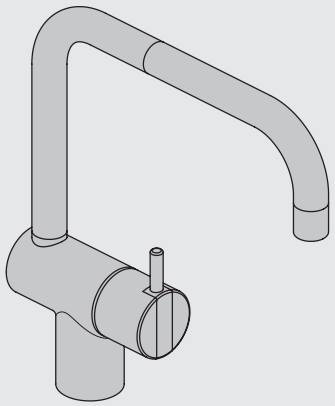

www.vola.com

vola

mnt_KV1_V3_40998778
06-09-2023

5 705230 005263

Data, 3 Bar /43.5 Psi:

	l/min.	Gal/min.
KV1:	9,0	2.4
KV1US:	4,5	1.2

Max. 65°C, 150°F

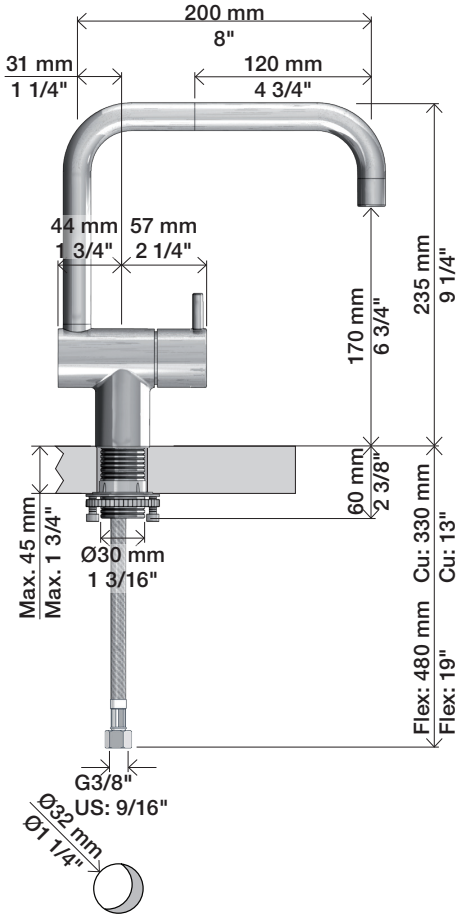

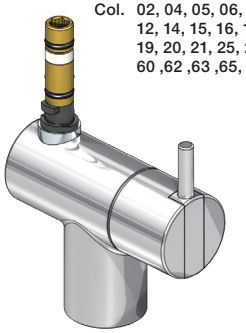

Col. 02, 04, 05, 06, 08, 09, 12, 14, 15, 16, 17, 18, 19, 20, 21, 25, 27, 60 ,62 ,63 ,65, 66

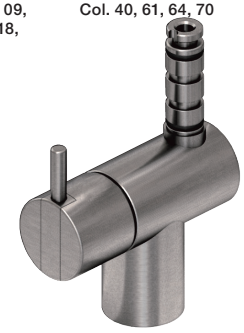

Col. 40, 61, 64, 70

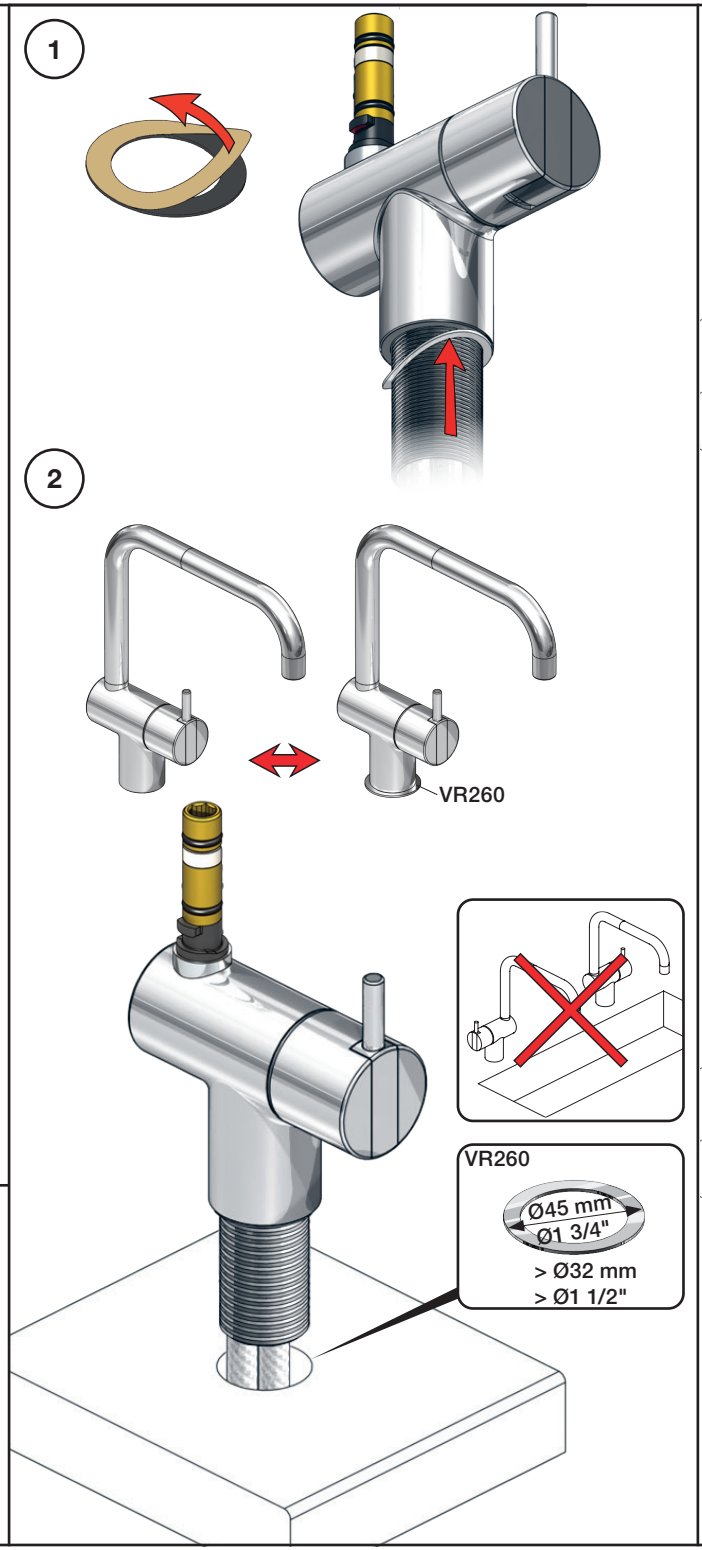

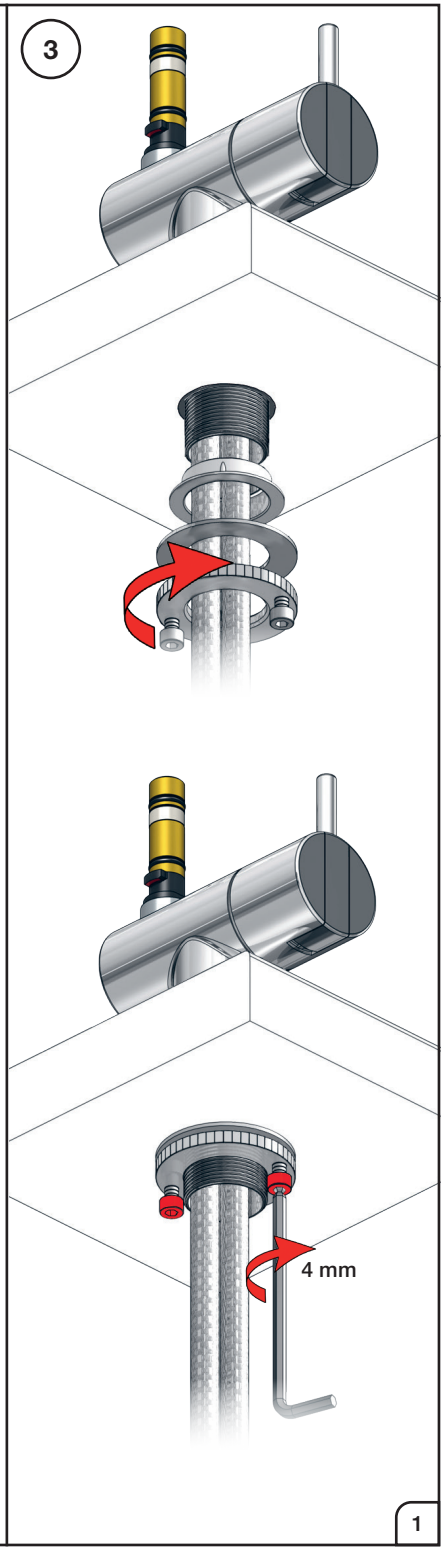

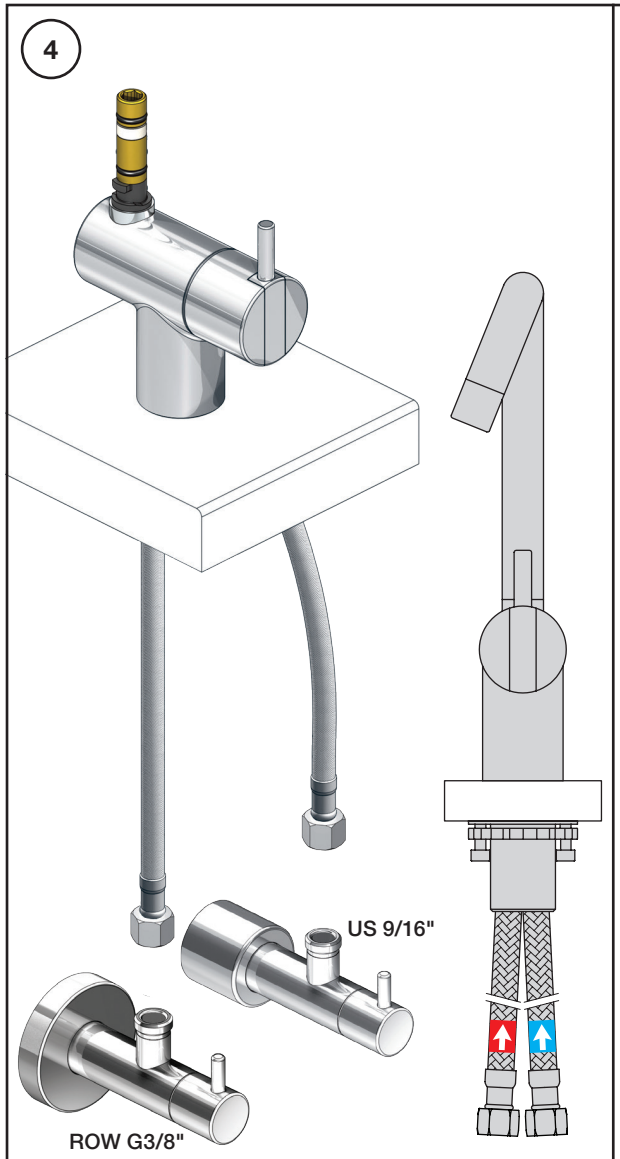

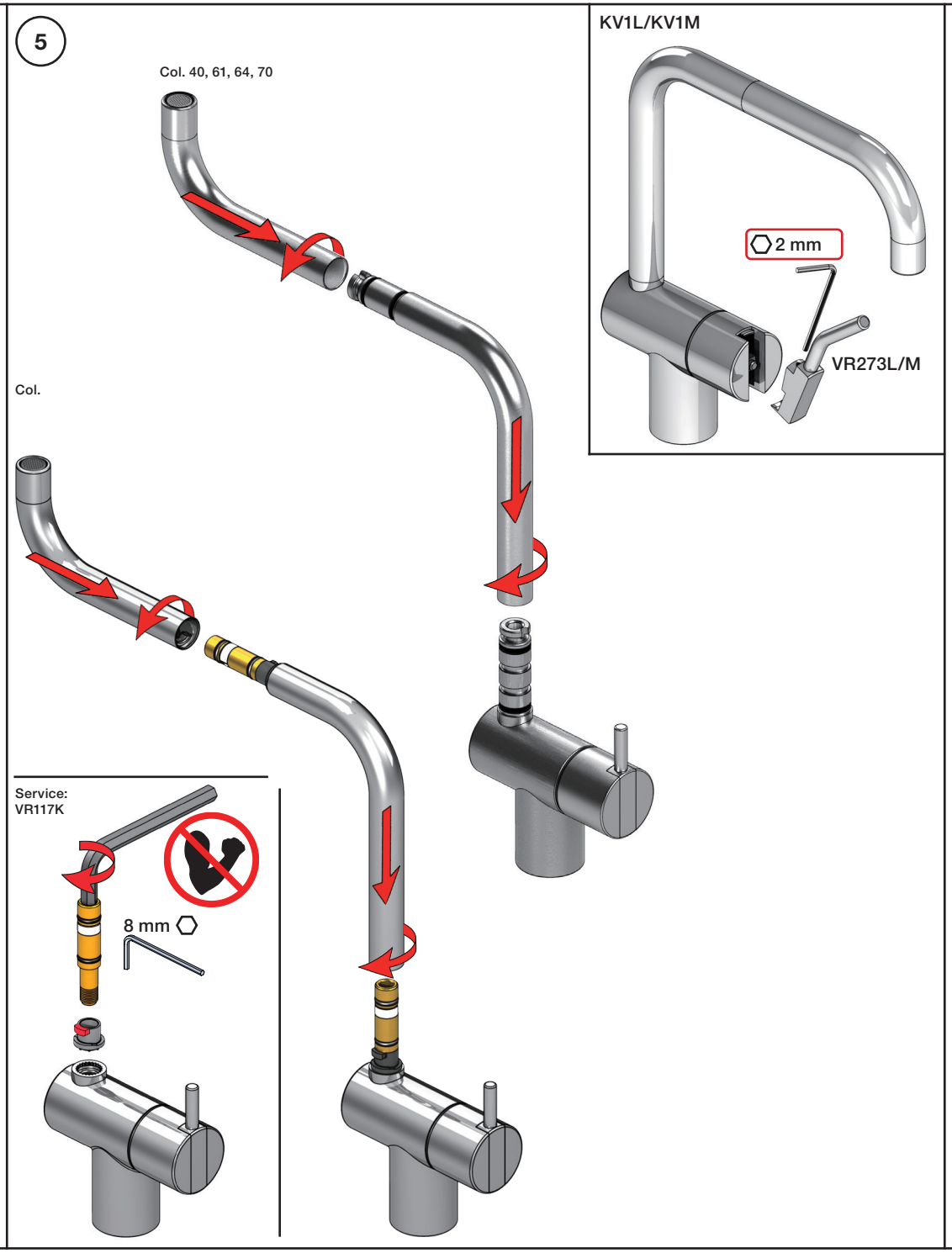

Operation
Bedienung
Betjening

Bruk
Bediening
Fonctionnement

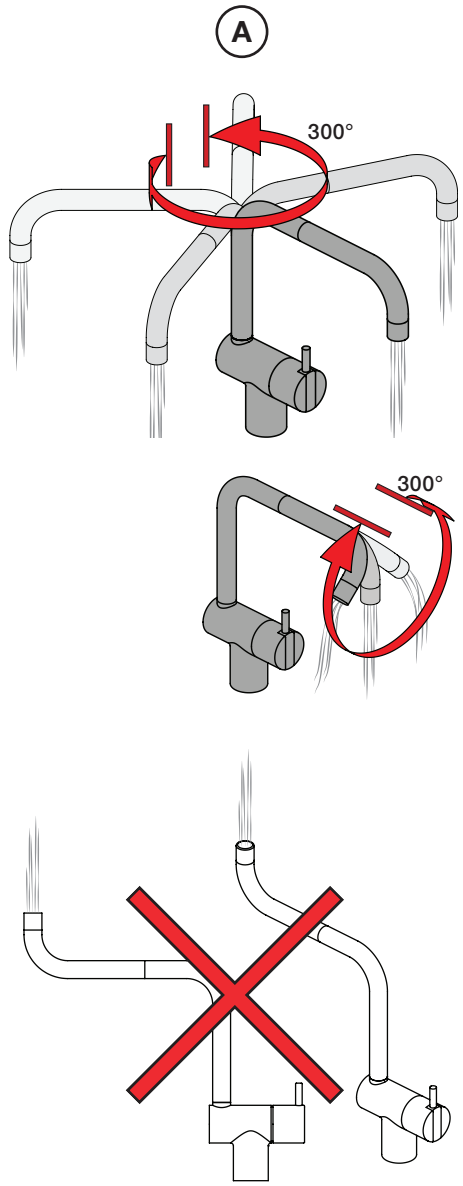

VOLA A/S • Lunavej 2 • DK-8700 Horsens • Tel. +45 7023 5500 • Fax +45 7023 5511 • sales@vola.dk • www.vola.com

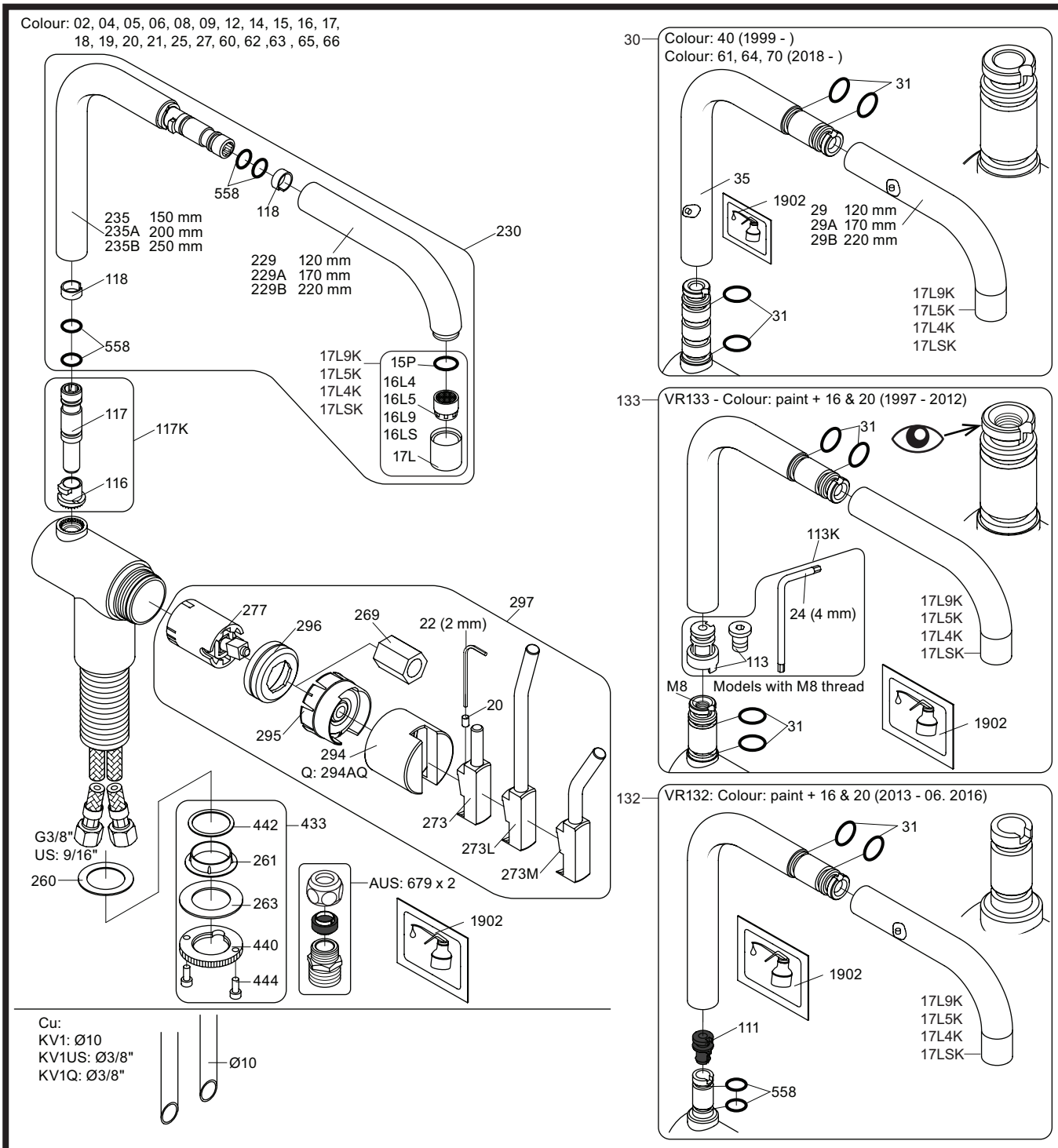

NR.10/L/M:	VR20, VR22, VR273/L/M, VR294, VR295
VR17L4K:	VR15P, VR16L4, VR17L (*US Standard*)
VR17L5K:	VR15P, VR16L5, VR17L
VR17L9K:	VR15P, VR16L9, VR17L
VR17LSK:	VR15P, VR16LS, VR17L
VR30:	VR15P, VR16L9, VR17L, VR29, 4xVR31, VR35, VR1902 (*F40*) (*and KV1 from 1972 - 1996*)
VR132:	VR15P, VR16L9, VR17L, 2xVR31, 2xVR558, VR1902 (*2013 - 06. 2016*)
VR133:	VR15P, VR16L9, VR17L, VR24, 4xVR31, VR113, VR1902 (*1997 - 2012*)
VR230:	VR15P, VR16L9, VR17L, 2xVR118, VR229, VR235, 4xVR558, VR1902 (*06-2016 -*)
VR117K:	VR116, VR117, VR118, 2xVR558, VR1902
VR277K:	VR22, VR269, VR277
VR297/L/M:	VR20, VR22, VR269, VR273/L/M, VR277, VR294, VR295, VR296
VR433:	VR261, VR263, VR440, VR442, 2xVR444

vola
Lunavej 2
DK-8700 Horsens
Tlf : + 45 7023 5500
sales@vola.com
www.vola.com

KV1 Family:

KV1: /250, /300
KV1L: /250, /300
KV1M: /250, /300

Date Jan. 23

Rev. 9

Sheet SB25.2